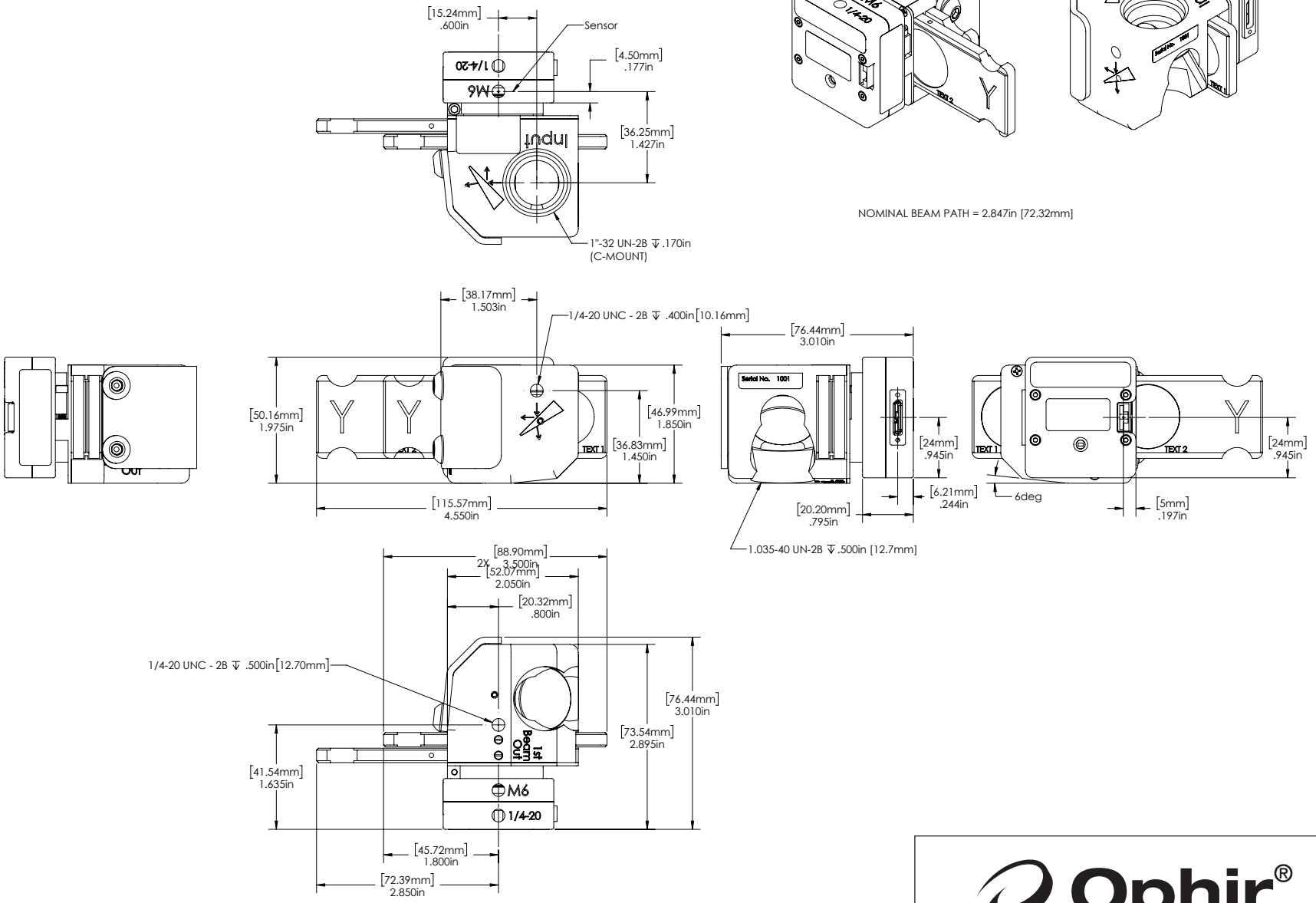
[15.24mm]
.600in
Sensor
[4.50mm]
.177in
[36.25mm]
1.427in
1/4-20
M6
Input
1"-32 UN-2B ↧ .170in
(C-MOUNT)
NOMINAL BEAM PATH = 2.847in [72.32mm]
[38.17mm]
1.503in
1/4-20 UNC - 2B ↧ .400in [10.16mm]
[50.16mm]
1.975in
[46.99mm]
1.850in
[36.83mm]
1.450in
[115.57mm]
4.550in
[76.44mm]
3.010in
Serial No. 1001
[24mm]
.945in
[6.21mm]
.244in
[20.20mm]
.795in
1.035-40 UN-2B ↧ .500in [12.7mm]
6deg
[5mm]
.197in
Out
[88.90mm]
3.500in
2X
[52.07mm]
2.050in
[20.32mm]
.800in
1/4-20 UNC - 2B ↧ .500in [12.70mm]
[76.44mm]
3.010in
[73.54mm]
2.895in
[41.54mm]
1.635in
1st
Beam
Out
[45.72mm]
1.800in
[72.39mm]
2.850in
Ophir®